W Series Island Display Rack 3 PR Kit (1 Sided)

Spec Sheet for IDR3-H-2EX (270-bottle wine rack kt)

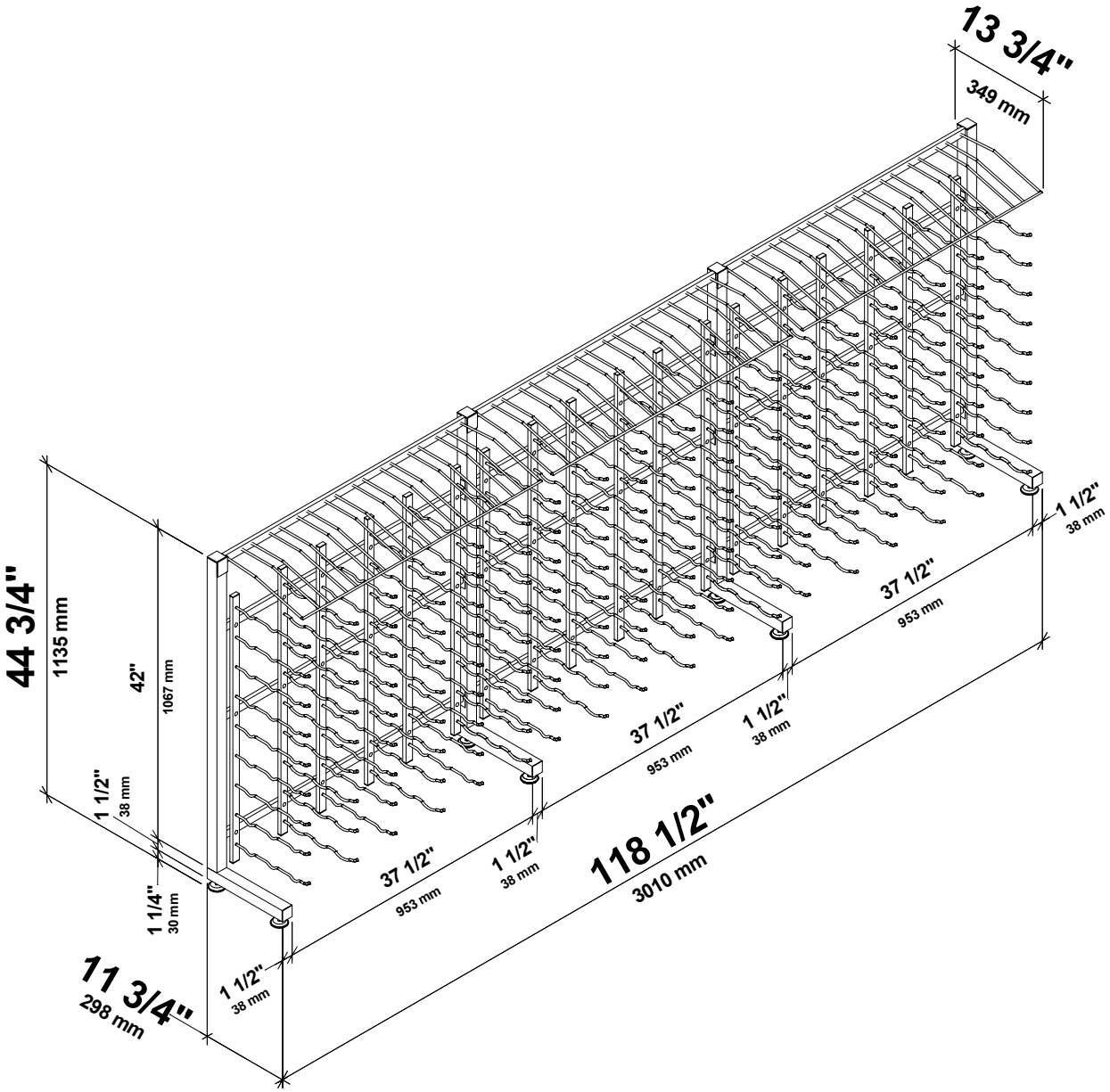

VINTAGEVIEW®
MOVING WINE STORAGE FORWARD

4690 Joliet St., Denver, CO 80239 | phone: 866.650.1500 | fax: 866.650.1501 | VintageView.com

For product warranty information, please visit vintageview.com/warranty