Vino Rails for Wood Surfaces

Installation instructions for Vino Rails (SKUs: VR-)

Included Parts

- (2) Vino Rails
- (2) Wood Lags
- (1) Hex Key
- (2) Nuts
- (1) 8.5"x11" Plotting Guide

Required Tools

- (1) Level
- (1) Drill
- (1) 5/32" (4mm) Drill Bit
- (2) 10mm or adjustable wrenches, or...
- (1) M6 Driver (recommended)

Important Note: The following instructions are for installing Vino Rails for Wood Surfaces (standard wine bottles, 750ml). Installation surfaces must have a minimum thickness of 1/2" (13.7mm). Please reference the BILT 3D app and/or product specific guides for drywall-backed or Magnum bottle (1.5L) instructions.

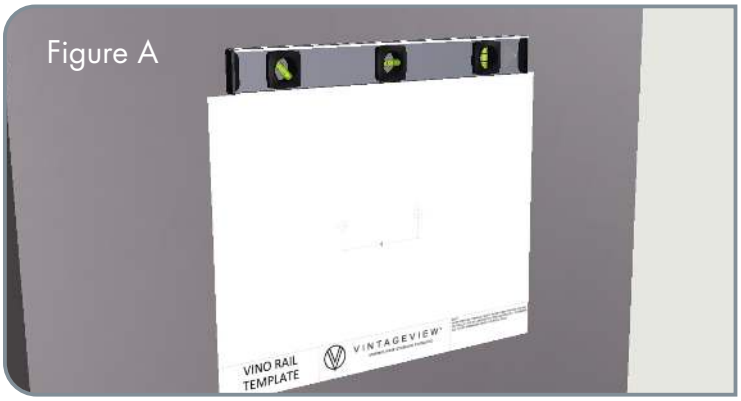

Figure A

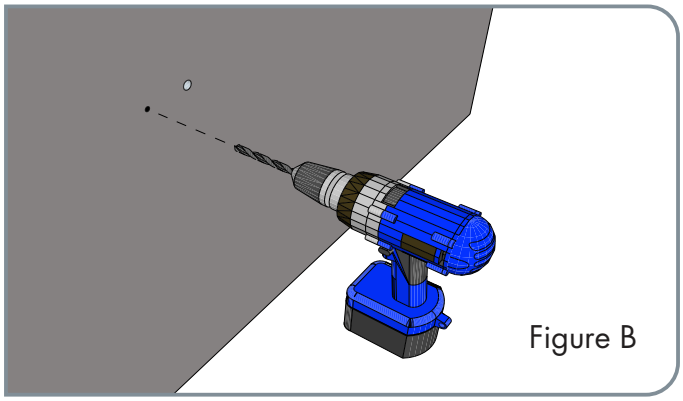

Figure B

1. MARK MOUNTING HOLE LOCATIONS

Use a level to ensure the printed mounting template is horizontal along the long edge (Figure A), mark hole locations by piercing the template with a pencil or sharp at the center the two (2) marks corresponding with the bottle direction chosen. Mounting holes will be 2-1/2" (65mm) apart.

For Magnum racking, adjust to 3" (77mm) but reference product specific instructions.

Pro Tip: To plot additional Vino Rails in the same column, mark a minimum of 5" (127mm) above or below each mounting hole for next set of Vino Rails.

2. CONFIRM WALL SURFACE

Drill two (2) pilot holes using a 5/32" (4mm) Drill Bit (Figure B) to determine whether your installation will be into solid wood or drywall surface.

NOTE: If it is determined to be drywall, please use (or purchase if necessary) Vino Series Collars and reference the Vino Rails with Collars (SKUs: VRC-) install guide.

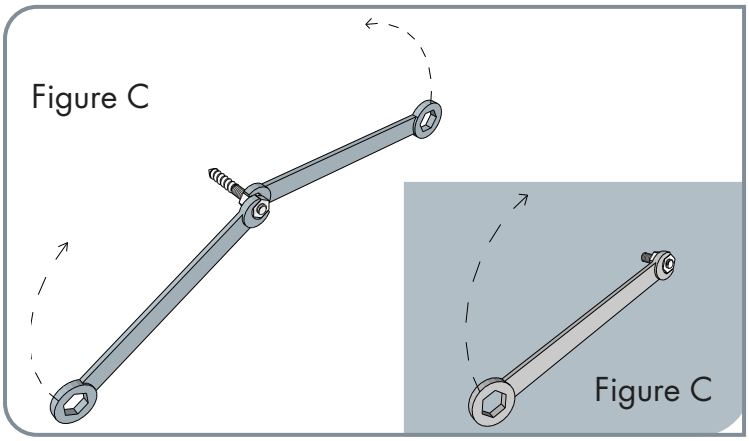

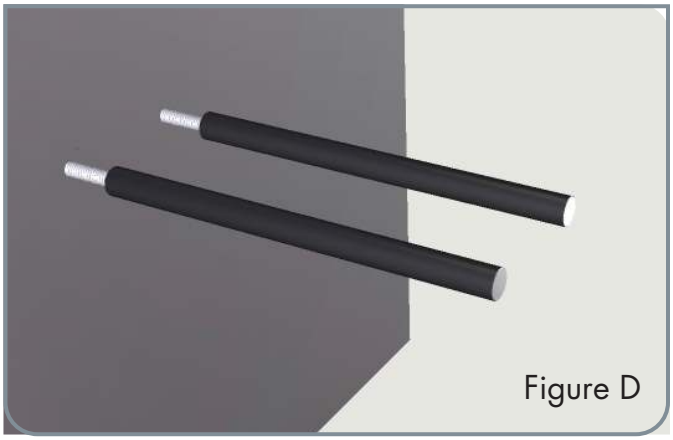

3. INSTALL WOOD LAGS

a. Using Hex Key or M6 Driver

Using either the provided hex key, drive the Lag Stud into the pilot holes until the coarse threads are no longer visible. When driving the Lag Stud, take care to ensure it remains level.

For larger projects or if a sturdier tool is needed, use an optional M6 Driver.

b. Using Nuts

Alternatively, attach two (2) provided nuts onto the fine threaded end of the Lag Stud. Using two 10mm wrenches, tighten the nuts against one another (Figure C), essentially creating a screw head. Then use one wrench on the outer nut and screw the wood lag into the pilot holes until the coarse threads are no longer visible.

4. INSTALL VINO RAILS

Thread two (2) Vino Rails onto the Studs (Figure D). Then, firmly hand-tighten taking care not to over tighten. Confirm Rails are level.

5. ADD WINE

Only the good stuff.

Problems?

Try Vino Rails installation using BILT 3D intelligent instructions, visit www.vintageview.com or give us a call at 303-504-9463.

Additional Notes:

All installations into drywall require the use of collars and alternate fasteners to properly support the Vino Rails. Any application outside of these parameters is not warranted by VintageView and may result in product and/or installation failure, property damage and/or bodily injury.

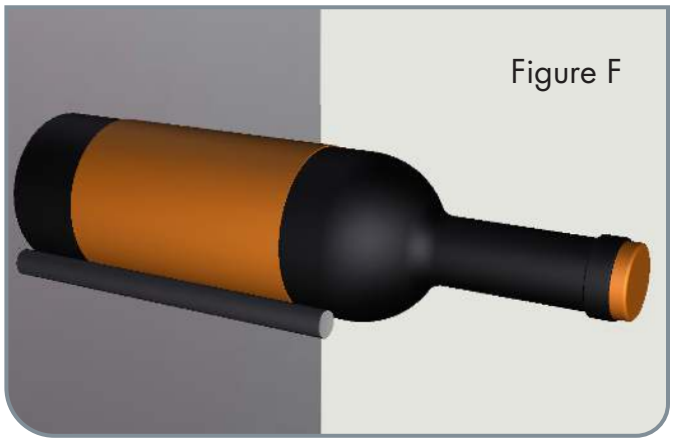

SCAN FOR BILT: 3D INSTRUCTIONS

POWERED BY BILT INTELLIGENT INSTRUCTIONS®

Care:

Vino Rails should be regularly checked for tightness. Should any rack to be found to be loose, tighten by hand until secure. If the face of the wall surface shows signs of breakage, discontinue use immediately until the wall may be adequately repaired.

Vino Rails may be cleaned a dry dusting cloth, compressed air cans, rubbing alcohol and a clean cloth to remove grease, oil, or other substances. Do not use cleaning supplies or abrasive surfaces as they will damage the finished surfaces of the parts.